Zoom Lens for DLP® Projectors (1.8 – 2.6:1)

ET-D75LE20

This zoom lens is designed for use with the PT-DZ8700, PT-DZ110X or other 3-chip DLP® projector. The lens makes it possible to vary the projection distance by changing the focal distance.

NOTE: Please use the lens only on the specified Panasonic 3-chip DLP® projector.

Specifications

F value:	2.5
Focal distance (f):	35.0 mm – 50.9 mm
Dimensions (W × H × D):	134 × 134 × 265 mm (5-9/32″ × 5-9/32″ × 10-7/16″)
Weight:	5.2 kg (11.5 lbs)

The throw ratio is an approximate value calculated by dividing the screen width by the projection distance.
DLP and the DLP logo are trademarks of Texas Instruments.
Weights and dimensions shown are approximate. Specifications subject to change without notice.

Dimensions

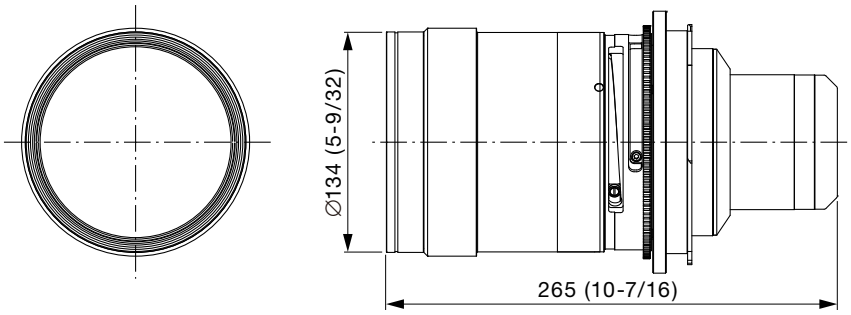

The illustration shows the lens attached to the PT-DZ12000/D12000/DW100.

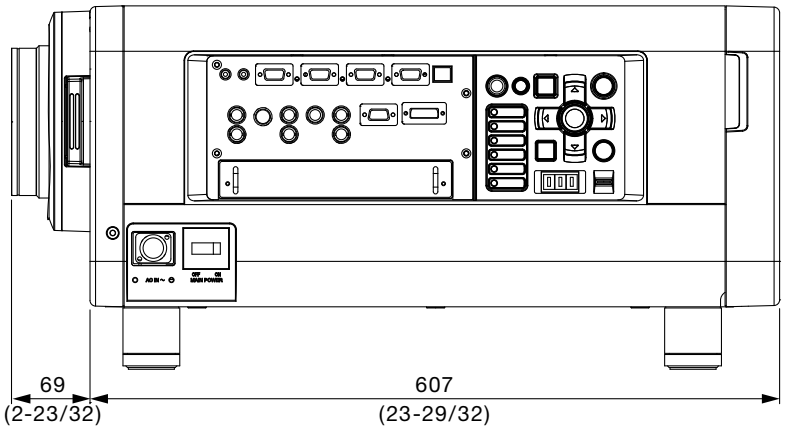

The illustration shows the lens attached to the PT-DZ8700/DS8500/DW8300/DZ110X/DS100X/DW90X.

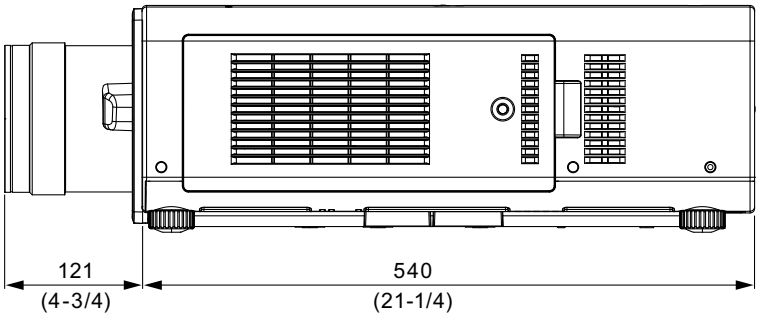

unit : mm (inch)
NOTE: This illustration is not drawn to scale.